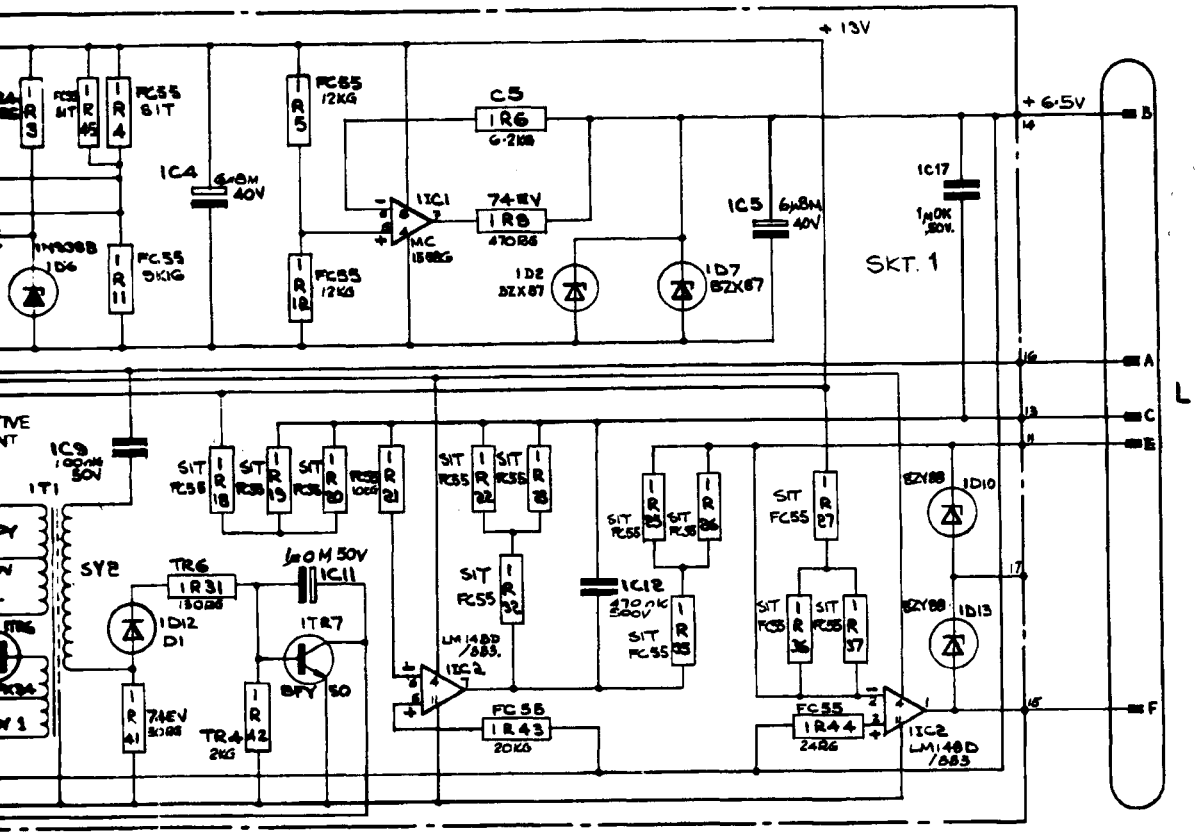
+13V
+6.5V
SKT. 1
C5
1R6
6.2KG
1IC1
MC 1558G
74EV
1R8
470RG
1C4
6μ8M 40V
1C5
6μ8M 40V
1C17
1μ0K 50V.
1D2
BZX87
1D7
BZX87
FC55
12KG
FC55
9K1G
1N938B
1D6
1C9
100nK 50V
1T1
SY2
TR6
1R31
150RG
1D12
D1
1μ0M 50V
1C11
1TR7
BFY 50
TR4
2KG
74EV
50RG
LM148D /883.
1IC2
FC55
1R43
20KG
1C12
470nK 500V
FC55
1R44
24RG
1IC2
LM148D /883
BZY88
1D10
1D13
L
B
A
C
E
F

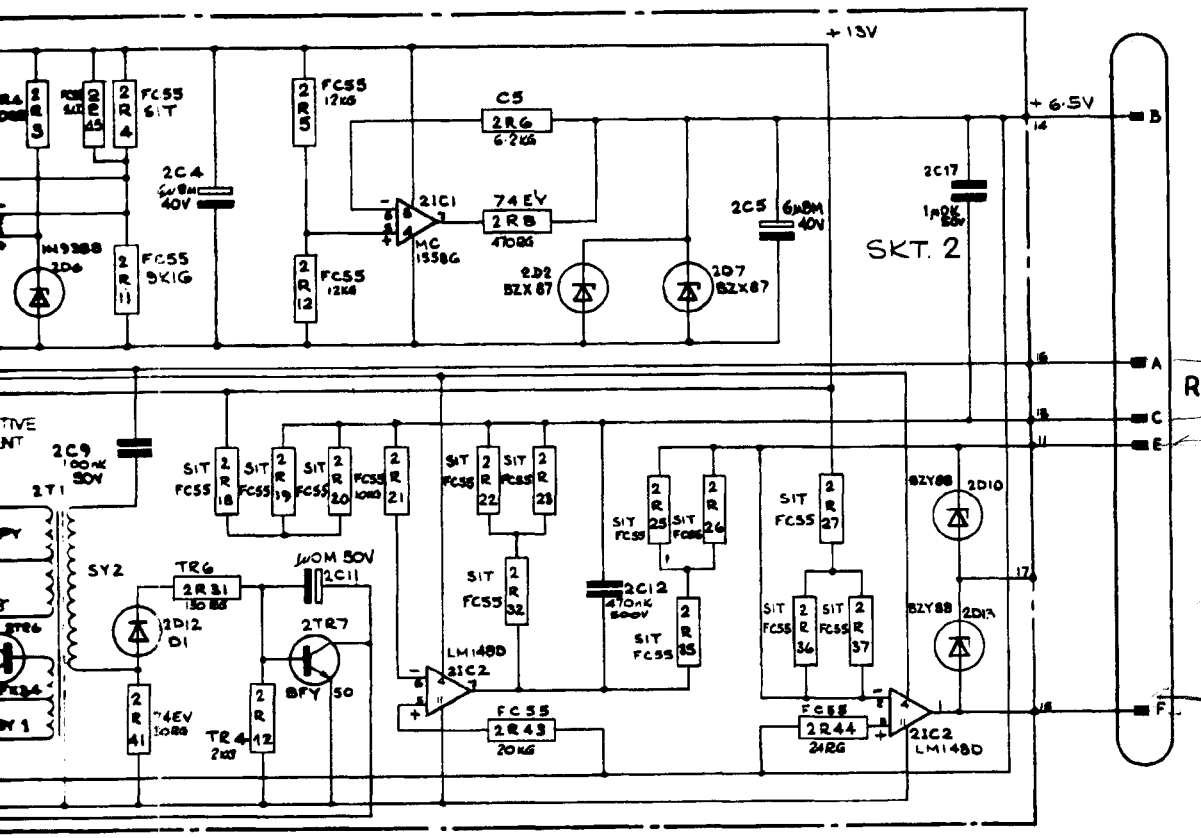
+13V
+6.5V
SKT. 2
C5
2R6
6.2KG
2IC1
MC 1558G
74EV
2R8
470RG
2C4
6μ8M 40V
2C5
6μ8M 40V
2C17
1μ0K 50V
2D2
BZX87
2D7
BZX87
FC55
12KG
FC55
9K1G
1N938B
2D6
2C9
100nK 50V
2T1
SY2
TR6
2R31
150RG
2D12
D1
1μ0M 50V
2C11
2TR7
BFY 50
TR4
2KG
74EV
50RG
LM148D
2IC2
FC55
2R43
20KG
2C12
470nK 500V
FC55
2R44
24RG
2IC2
LM148D
BZY88
2D10
2D13
R
B
A
C
E
F