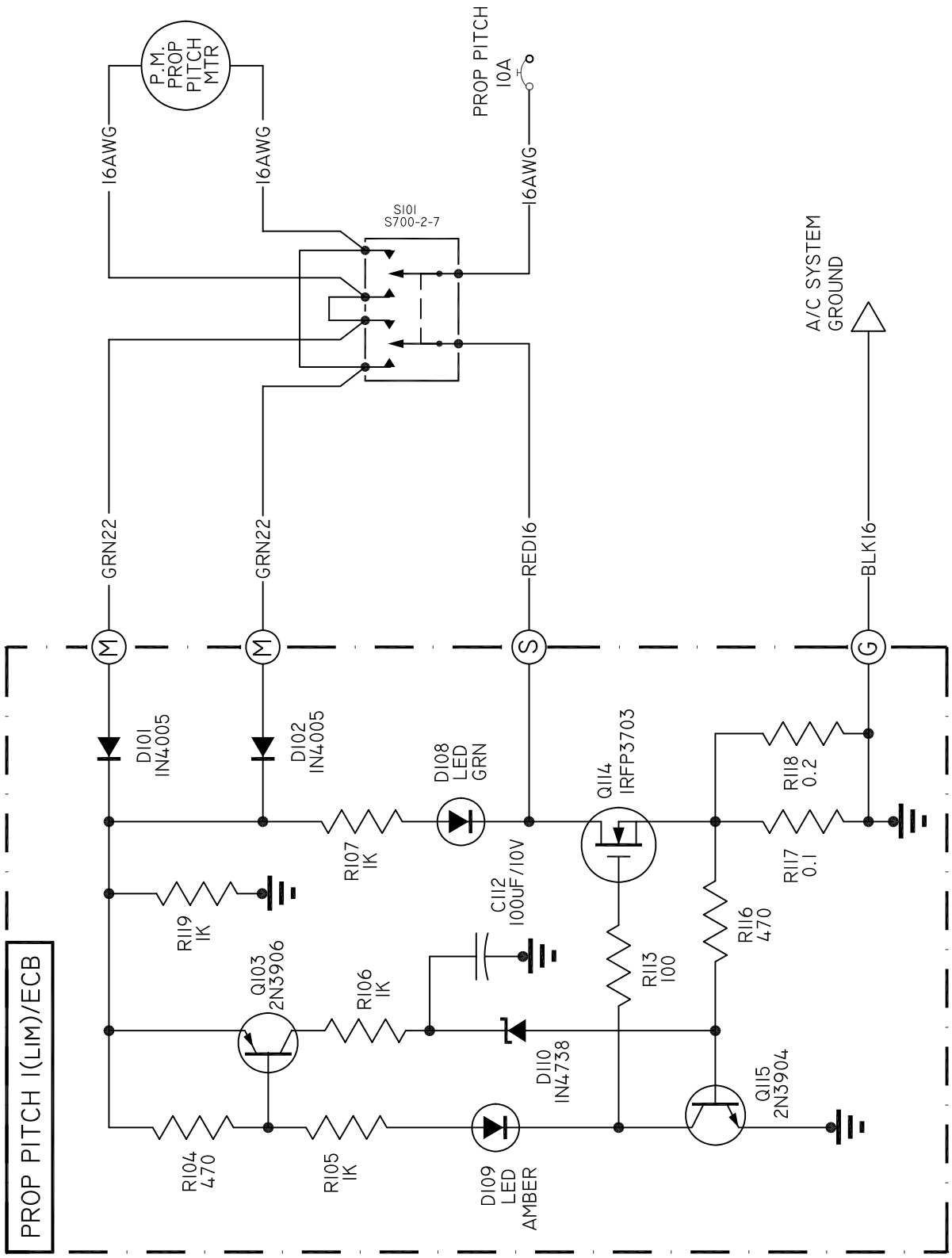

TITLE	PAGE
PROP PITCH CURRENT LIMITER AND ELECTRONIC C/B	1.0