Figure 1. Simplified Application

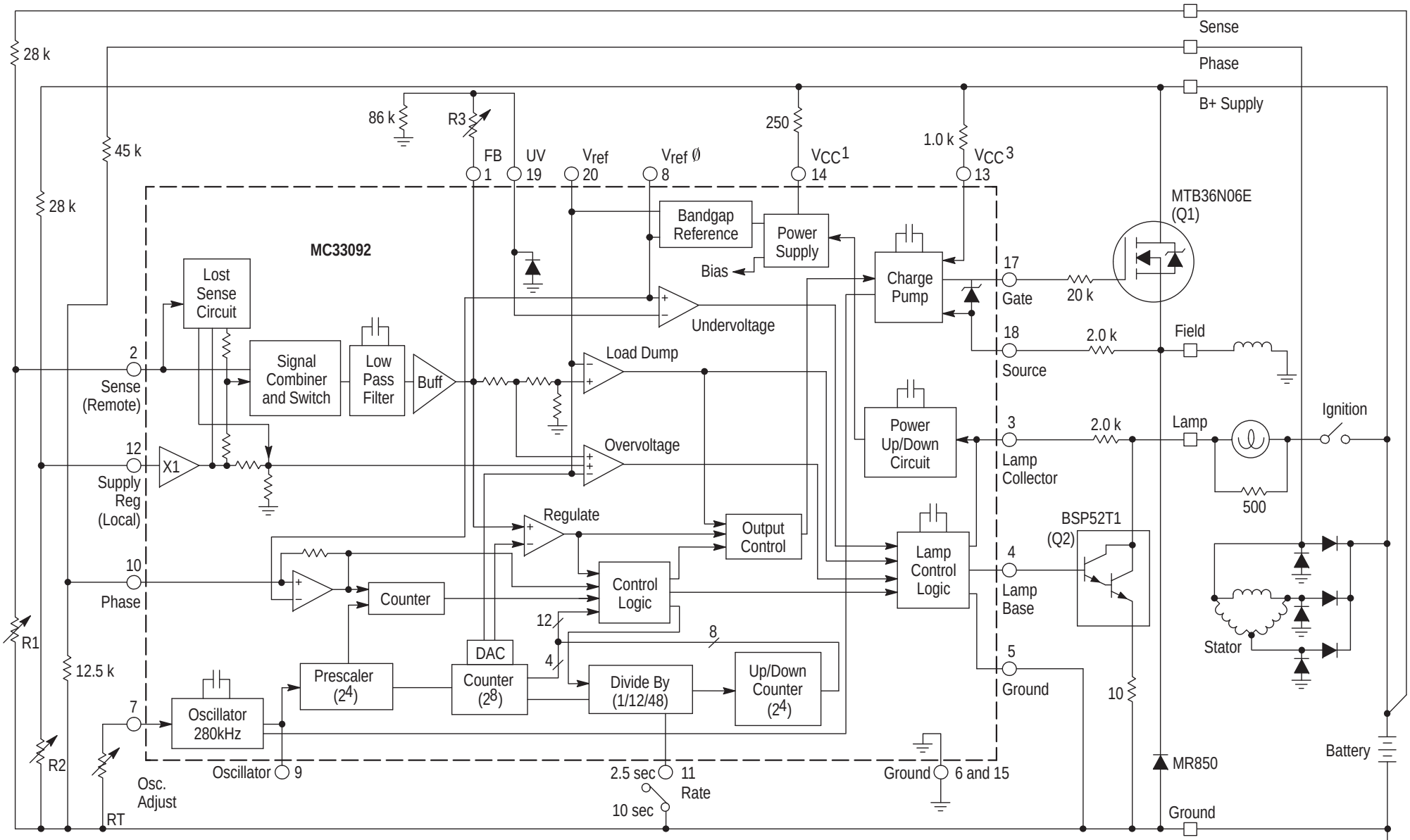

NOTES: R1 = R2 = 3.0 k to 5.0 k
R3 = 10 k to 15 k
RT = 50 k to 100 k