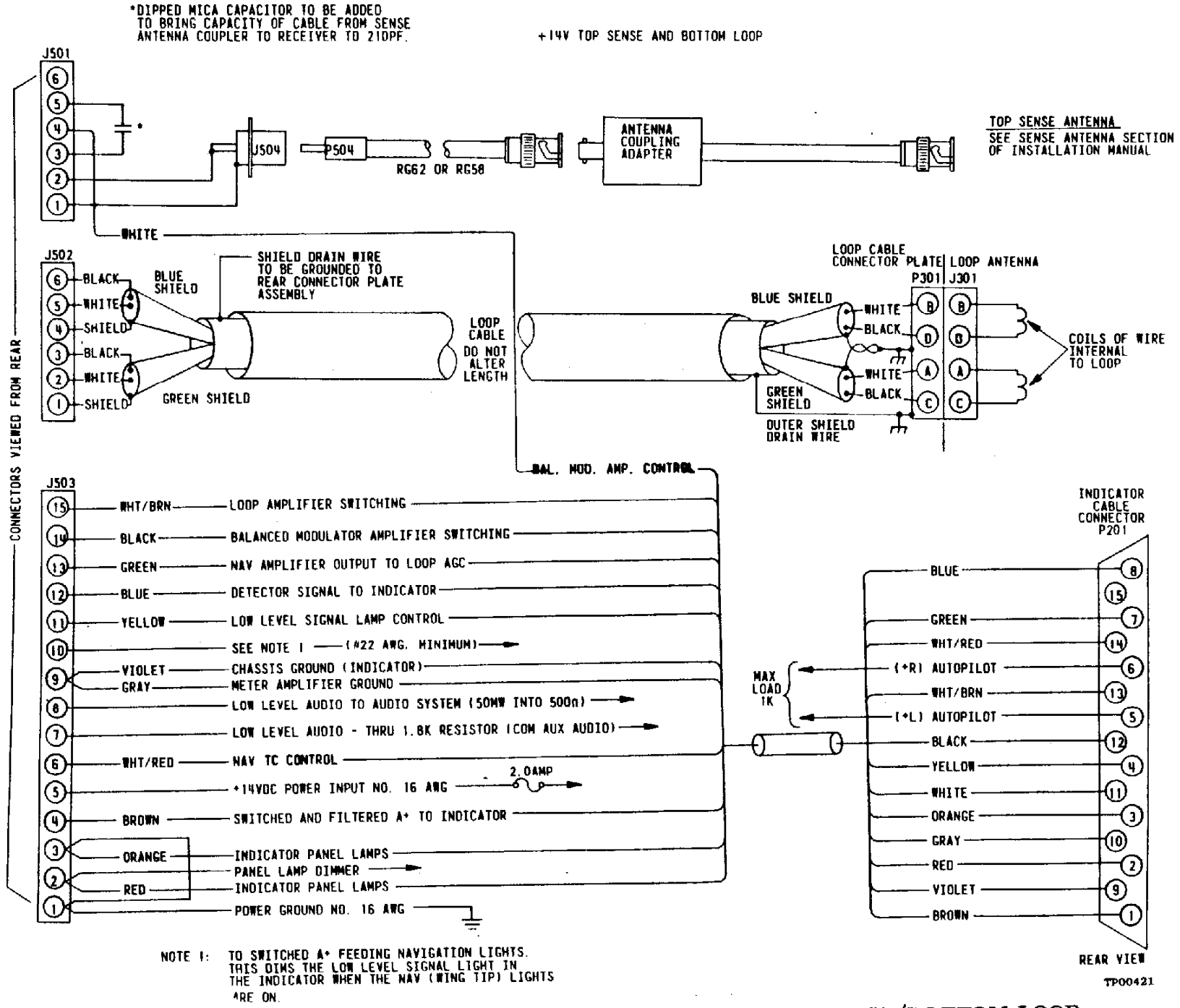

FIGURE 2-15. INSTALLATION WIRING DIAGRAM, 14 VOLT, TOP SENSE/BOTTOM LOOP